Alphalite Inc.

| | |
|---|---|
| PROJECT | |
| TYPE | DATE |
| ITEM NO. | |
| NOTE | |

# 3″ MINI DEEP REGRESS LED DOWNLIGHT

## MDDL-3 Series

3″ Mini Deep Regress
LED Downlight

## DESCRIPTION

The MDDL series is a versatile, modular, 3″ mini regress downlight, it offers high-quality COB design color 2700-4000K and 3000-2000K dim to warm, 5-19W field selectale output, optional regress trims, reflectors, and optical lenses with various beam angles.

**APPLICATION**
The MDDL seamlessly integrates into a wide range of architectural environments, including hospitality spaces, showrooms, retail stores, commercial offices, residential areas, galleries, church, museums, and luxury interiors.

5 YEAR WARRANTY

c UL us LISTED

**Quick Ship Product**

## SPECIFICATION FEATURES

**Construction**
Remodel and detachable LED driver (Non-IC rated), aluminum housing for engine acting as the heat sink to maximize life.
Come standard with 360° horizontal adjustable holder and additional 30° tilt angle optional precision aiming for perfect light placement.

**Electrical**
Offers a 2-in-1 LED driver compatible with 0-10V (1% Dimming deep) and TRIAC dimming (supports Leading-edge and Trailing-edge dimmer) for convenient inventory management. Dim to warm and up to CRI95 optional.

**Certifications / Regulatory**
UL listed for dry and damp locations rated, optional waterproof cover to upgrade to wet locations rated.

**Warranty**
5-year limited warranty. See complete warranty terms for details.

## ORDERING INFORMATION

**Sample Number: MDDL-3-19L6/940-B15-HA-TL-R-RBK**

| Series | Size | Lumen Package | | CRI |
|---|---|---|---|---|
| **MDDL** - Mini Deep Regress Downlight | **3** - 3″ | **19L6**<br>- 19/16/13/10/8/5W, 1900/1790/1420/1125/915/590lm | **12L**<br>- 13W, 1235lm | **9** - 90CRI<br>**95** - 95CRI (For 12L only) |

| CCT | Beam Angle | Holder | Trim | Reflector Color |
|---|---|---|---|---|
| **40** - 4000K<br>**35** - 3500K<br>**30** - 3000K<br>**27** - 2700K<br>**DW** - 3000~2000K (Dim to Warm, for 12L only) | **B15** - 15°<br>**B24** - 24°<br>**B36** - 36°<br>**B60** - 60° | **HA** - 360° Horizontal Adjustable<br>**TA** - 360° Horizontal and 30° Tilt angle Adjustable | **TL-R** - Round Trimless<br>**TBK-R** - Round trim with black flange<br>**TWH-R** - Round trim with white flange<br>**TL-S** - Square trimless<br>**TBK-S** - Square trim with black flange<br>**TWH-S** - Square trim with white flange | **RBK** - Black Reflector<br>**RWH** - White Reflector<br>**RGD** - Gold Reflector<br>**RCS** - Chrome Silver Reflector |

| Emergency Backup | Accessories Option | |
|---|---|---|
| **EM-18W** - Remodel 18W emergency backup (Require field installation) | **MDDL-3R-NCB-NIC** - 3″ Non-IC version New Construction Bracket for Round trimmed fixture<br>**MDDL-3R-NCB-IC** - 3″ IC version New Construction Bracket for Round trimmed fixture<br>**MDDL-3R-NCB-TL-NIC** - 3″ Non-IC version New Construction Bracket for Round trimless fixture<br>**MDDL-3R-NCB-TL-IC** - 3″ IC version New Construction Bracket for Round trimless fixture<br>**MDDL-3S-NCB-NIC** - 3″ Non-IC version New Construction Bracket for Square trimmed fixture<br>**MDDL-3S-NCB-IC** - 3″ IC version New Construction Bracket for Square trimmed fixture<br>**MDDL-3S-NCB-TL-NIC** - 3″ Non-IC version New Construction Bracket for Square trimless fixture<br>**MDDL-3S-NCB-TL-IC** - 3″ IC version New Construction Bracket for Square trimless fixture<br>**DL-3R-HB** - 3″ Round Black honeycomb cover<br>**DL-3R-WR** - 3″ Round Transparent waterproof cover to upgrade to wet rated<br>**DL-3S-WR** - 3″ Square Transparent waterproof cover to upgrade to wet rated | **DL-3R-Dxx** - 3″ Round Decorative Kit for round trims only<br>(First x can be Y, G, T, B, R as Yellow, Green, Transparent, Blue, Red for the color of the reflected lights; Second x can be B or W as Black or White for the shielding cover in the middle)*<br>* Reference the combination of next page. |

## SUMMARY

| | |
|---|---|
| Input Voltage | 120-277V (only 120V for Triac dimming) |
| Power Factor | > 0.9 |
| THD | < 20% |
| Efficacy | > 80 LPW |
| Delivered Lumens | See energy data for details |
| Dimming | 0-10V Continuous (1-100%) and Triac |
| CRI | > 90 |
| CCT | 2700K, 3000K, 3500K, 4000K or 3000~2000K dim to warm |
| Operating Temp. | -4°F~104°F (-20°C~40°C) |
| Rated Life | 50,000 hours |
| IP Rating | IP20 or Wet location |

## ENERGY PERFORMANCE DATA

| Part No. | Rated Wattage (W) | Delivered Lumens (lm) | Efficacy (lm/W) |
|---|---|---|---|
| MMDL-3-19L6/9XX-XX-BXX-XX-XX-R-XX | 19/16/13/10/8/5 | 1900/1790/1420/1125/915/590 | 100-118 |
| MMDL-3-19L6/9XX-XX-BXX-XX-XX-S-XX | 19/16/13/10/8/5 | 1520/1400/1100/885/715/450 | 80-90 |
| MMDL-3-12L/95DW-XX-BXX-XXX | 13 | 1235 | 95 |

*The delivered lumens above are based on round trim and white reflector, B15 and 3000K.
**Default setting at time of shipping are highest wattage.

## OPTICS

B15

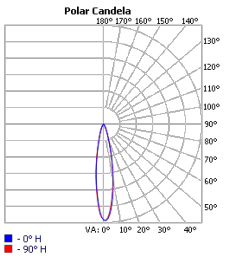


B24

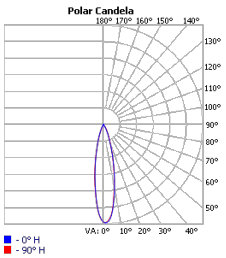


B36

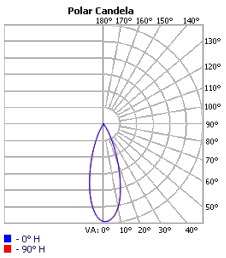


B60

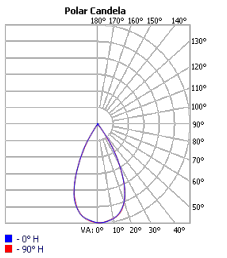


## COMBINATION

## DIMENSION

### With Round Trimless

Requires opening size: Diameter 3-1/2″

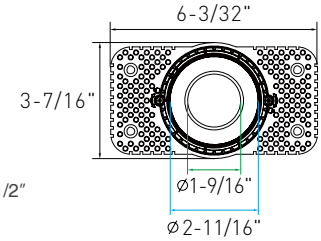


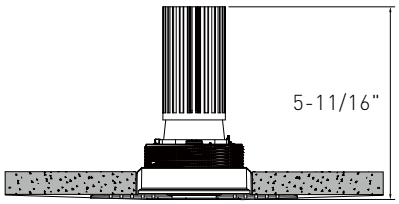


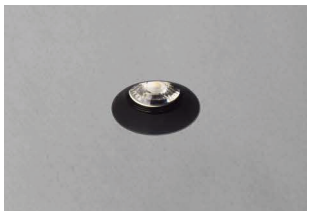

### With Square Trimless

Requires opening size: 3-1/2″ x 3-5/16″

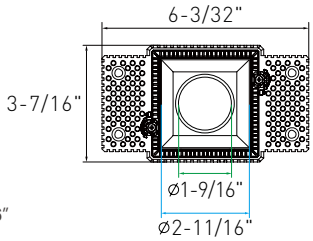


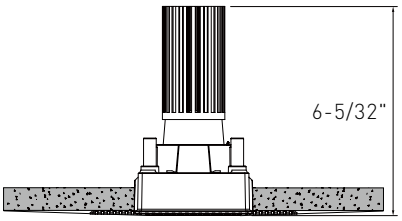


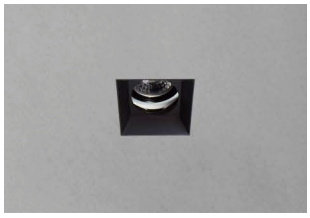

### With Round Trim

Requires opening size: Diameter 3″

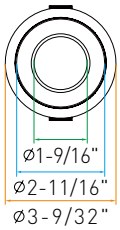


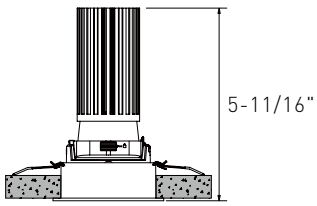

### 3” Square Trim

Requires opening size: 3″ x 2-7/8″

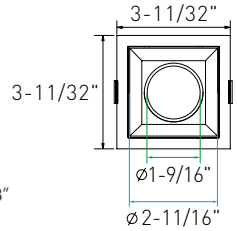


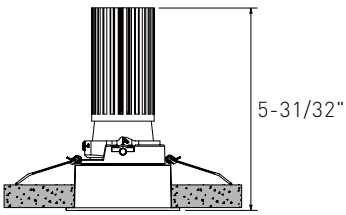

## DIMENSION

Non-IC New Construction Bracket

IC New Construction Bracket

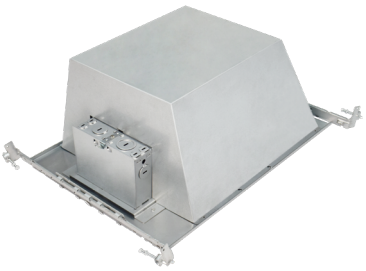

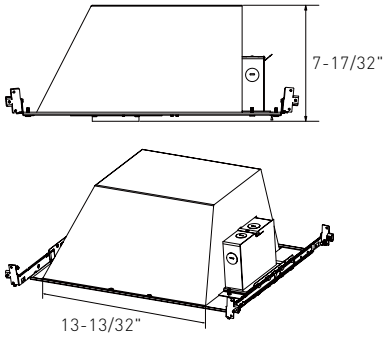


MDDL-3R-NCB-NIC or IC

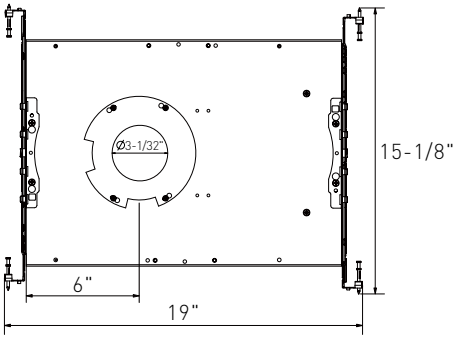


MDDL-3R-NCB-TL-NIC or IC

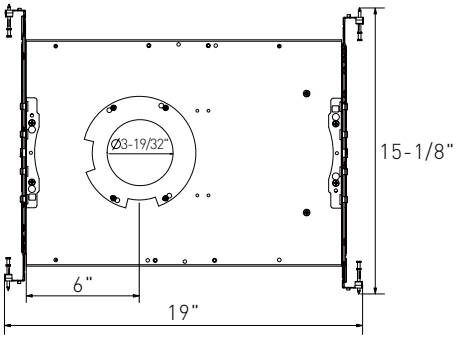


MDDL-3S-NCB-NIC or IC

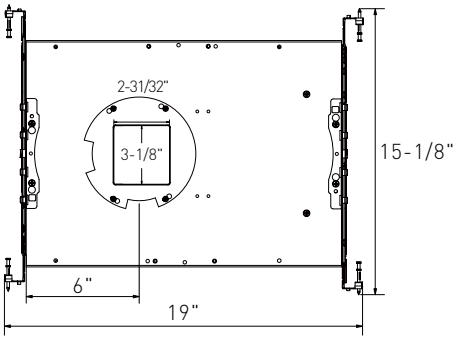


MDDL-3S-NCB-TL-NIC or IC

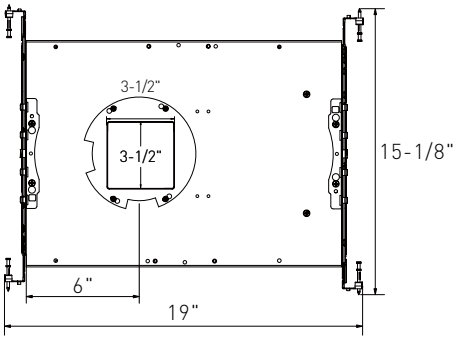

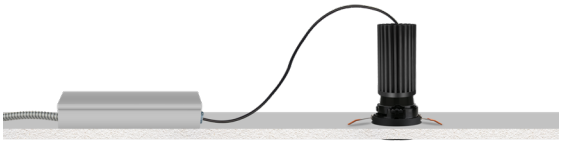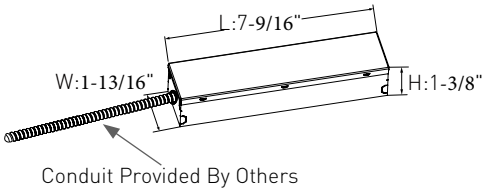
Remodel LED driver